SERIES 661 QUICK POSITIONING CONCENTRICITY GAUGE

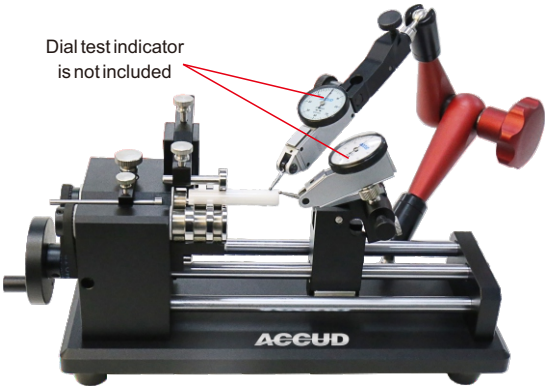

661-002-01

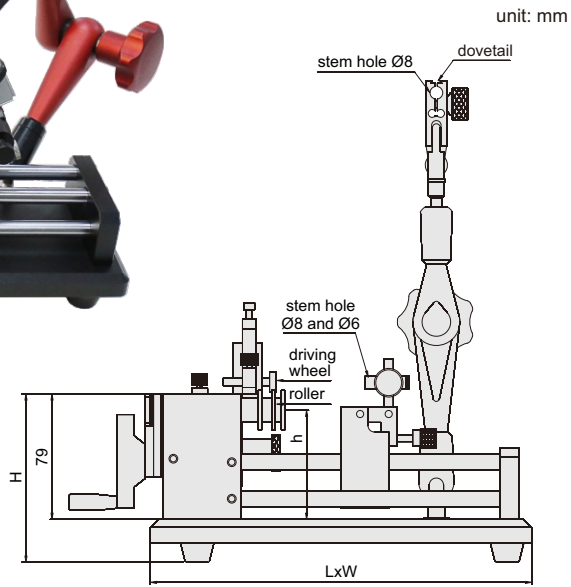

- Quick positioning, suitable for mass measurement
- Optional accessories: dial test indicator (code: 261-002-01 or 261-002-02)

Code	Diameter range	Workpiece length	Accuracy	Center height (h)	LxWxH
661-002-01	Ø1-35mm	15-100mm	2μm	70mm	260x100x130
661-004-01	Ø20-110mm	15-200mm	2μm	110mm	350x150x200

* NEW

INDICATOR